COMPONENTS DIAGRAM: **TRIDENT MK2 CRB + SPR**

KRYTAC®

R.2020.02.21

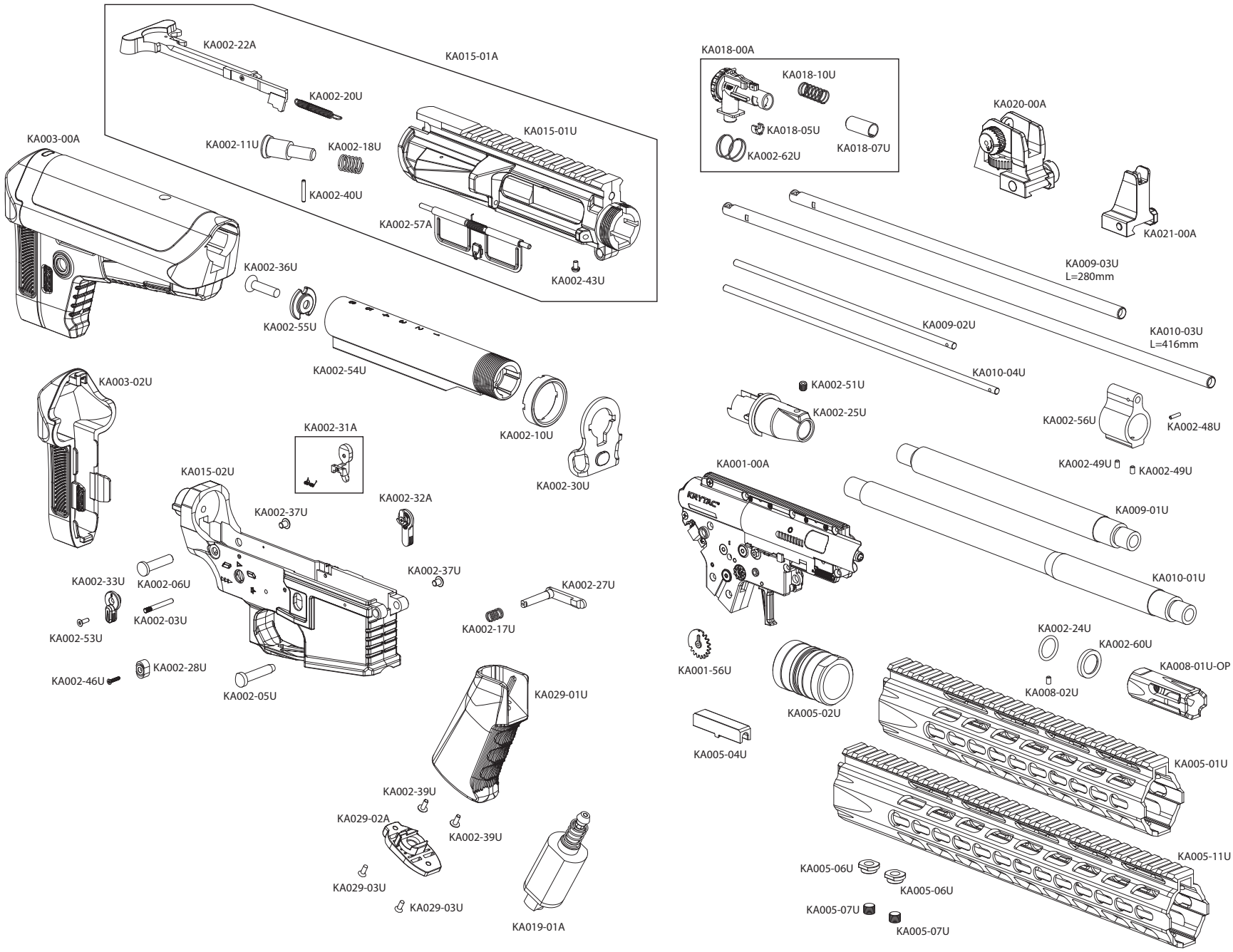

COMPONENTS DIAGRAM: **TRIDENT MK2 CRB + SPR GEARBOX**

KRYTAC®

R.2020.02.21

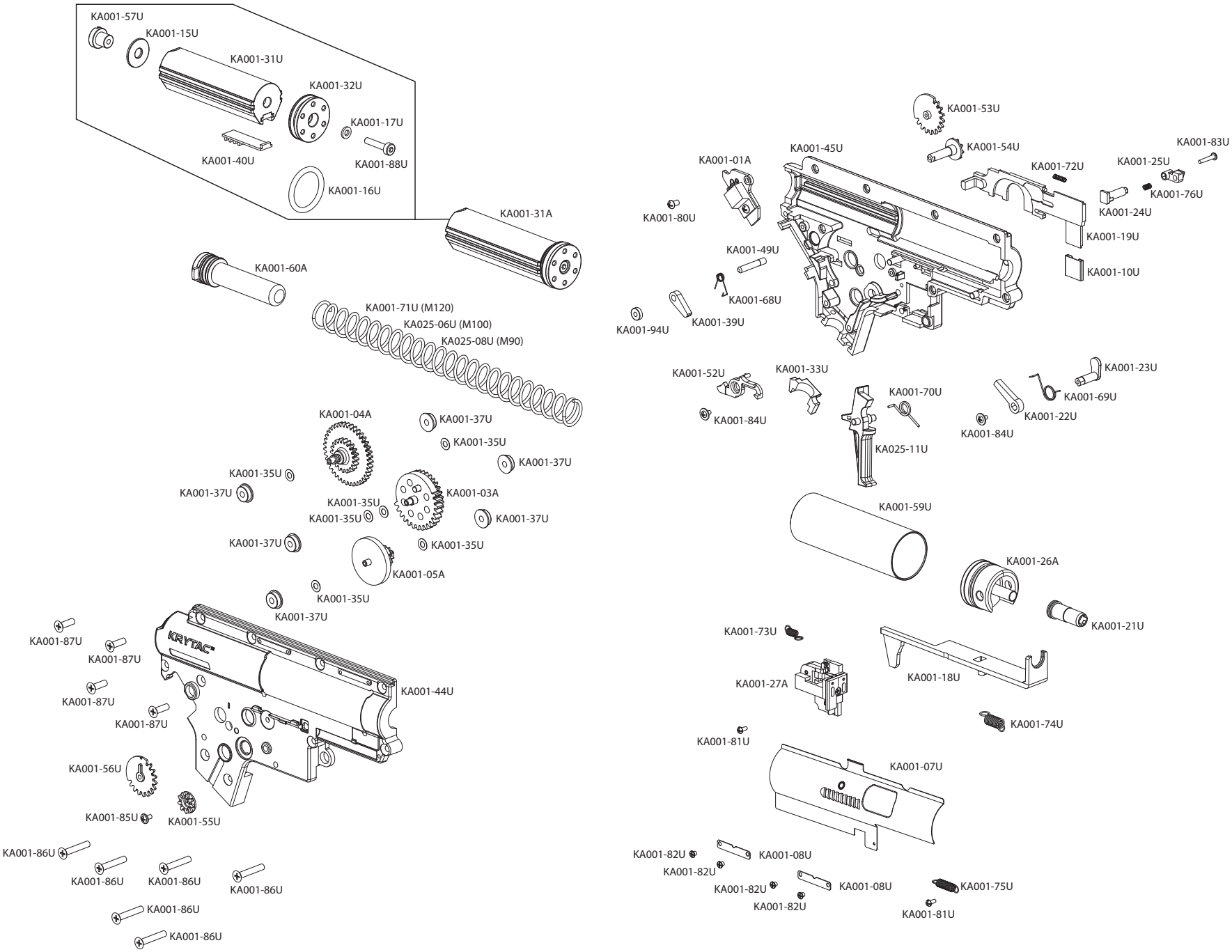

COMPONENTS LIST: **TRIDENT MK2 CRB + SPR**

KRYTAC®
R.2020.02.21

PART #	NAME
KA001-00A	GEARBOX
KA001-01A	MOSFET ASSEMBLY
KA001-03A	SECTOR GEAR
KA001-04A	SPUR GEAR
KA001-05A	BEVEL GEAR
KA001-07U	BOLT PLATE
KA001-08U	BOLT PLATE GUIDE (2)
KA001-10U	CONTACT (SELECTOR)
KA001-15U	MAIN SPRING SHIM
KA001-16U	PISTON HEAD O-RING
KA001-17U	PISTON HEAD SHIM
KA001-18U	TAPPET PLATE
KA001-19U	SELECTOR PLATE
KA001-21U	AIR NOZZLE
KA001-22U	SAFETY BLOCK
KA001-23U	SAFETY BLOCK LEVER
KA001-24U	BOLT PLATE LOCK
KA001-25U	BOLT PLATE LOCK BUTTON
KA001-26A	CYLINDER HEAD ASSEMBLY
KA001-27A	SWITCH ASSEMBLY
KA001-31A	PISTON ASSEMBLY
KA001-31U	PISTON BODY
KA001-32U	PISTON HEAD
KA001-33U	WIRING COVER
KA001-35U	SHIM (6)
KA001-37U	BEARING (6)
KA001-39U	ANTI-REVERSE LATCH
KA001-40U	PISTON TOOTH RACK
KA001-44U	GEARBOX SHELL (RIGHT)
KA001-45U	GEARBOX SHELL (LEFT)
KA001-49U	ANTI-REVERSE LATCH PIN
KA001-52U	DISCONNECT LEVER
KA001-53U	SELECTOR GEAR (LEFT)
KA001-54U	SELECTOR TRANSFER AXIS GEAR
KA001-55U	SELECTOR TRANSFER CAP GEAR
KA001-56U	SELECTOR GEAR (RIGHT)
KA001-57U	PISTON HEAD NUT
KA001-59U	CYLINDER (TYPE 1)
KA001-60A	SPRING GUIDE ASSEMBLY
KA001-68U	ANTI-REVERSE LATCH SPRING
KA001-69U	SAFETY BLOCK SPRING
KA001-70U	TRIGGER SPRING
KA001-71U	MAIN SPRING (M120)
KA001-72U	DISCONNECT SPRING
KA001-73U	SWITCH SPRING
KA001-74U	TAPPET PLATE SPRING
KA001-75U	BOLT RETURN SPRING
KA001-76U	BOLT PLATE LOCK SPRING
KA001-80U	MOSFET SCREW
KA001-81U	BUTTON MICRO SCREW
KA001-82U	BOLT PLATE SCREW (4)
KA001-83U	BOLT PLATE LOCK SCREW
KA001-84U	FLAT MICRO SCREW (2)
KA001-85U	SELECTOR TRANSFER GEAR SCREW
KA001-86U	GEARBOX SHELL SCREW (LONG) (6)
KA001-87U	GEARBOX SHELL SCREW (SHORT)(4)
KA001-88U	PISTON HEAD SCREW
KA001-94U	SOLID STEEL BUSHING
KA002-03U	GEARBOX PIN
KA002-05U	FRONT RECEIVER PIN
KA002-06U	REAR RECEIVER PIN
KA002-10U	CASTLE NUT
KA002-11U	FORWARD ASSIST BUTTON
KA002-17U	MAGAZINE RELEASE SPRING
KA002-18U	FORWARD ASSIST SPRING
KA002-20U	CHARGING HANDLE SPRING
KA002-22A	CHARGING HANDLE ASSEMBLY
KA002-24U	CRUSH WASHER O-RING
KA002-25U	OUTER BARREL BASE
KA002-27U	MAGAZINE RELEASE
KA002-28U	MAGAZINE RELEASE BUTTON
KA002-30U	SLING PLATE
KA002-31A	BOLT STOP ASSEMBLY
KA002-32A	LEFT SELECTOR ASSEMBLY
KA002-33U	RIGHT SELECTOR
KA002-36U	BUFFER TUBE SCREW
KA002-37U	RECEIVER PIN CAP SCREW (2)
KA002-39U	PISTOL GRIP SCREW (2)
KA002-40U	FORWARD ASSIST PIN
KA002-43U	CHARGING HANDLE ANCHOR SCREW
KA002-46U	MAGAZINE RELEASE SCREW
KA002-48U	GAS BLOCK PIN
KA002-49U	GAS BLOCK SCREWS (2)
KA002-51U	OUTER BARREL BASE SCREW
KA002-53U	RIGHT SELECTOR SCREW
KA002-54U	BUFFER TUBE
KA002-55U	BUFFER TUBE SCREW CAP
KA002-56U	GAS BLOCK
KA002-57A	DUST COVER ASSEMBLY
KA002-60U	CRUSH WASHER
KA002-62U	HOP-UP OUTER TENSION SPRING
KA003-00A	STOCK ASSEMBLY
KA003-02U	BUTTPAD
KA005-01U	RAIL10 INCH (CRB)
KA005-02U	BARREL NUT
KA005-04U	RAIL KEY
KA005-06U	RETENSION NUT (2)
KA005-07U	RETENSION SCREW (2)
KA005-11U	RAIL 13 INCH (SPR)
KA008-01U-OP	FLASH HIDER (ORANGE PLASTIC)
KA008-02U	SET SCREW
KA009-01U	CRB OUTER BARREL
KA009-02U	CRB GAS TUBE
KA009-03U	CRB INNER BARREL (280MM)
KA010-01U	SPR OUTER BARREL
KA010-03U	SPR INNER BARRE (416MM)
KA010-04U	SPR GAS TUBE
KA015-01A	UPPER RECEIVER ASSEMBLY
KA015-01U	UPPER RECEIVER
KA015-02U	LOWER RECEIVER
KA018-00A	HOP-UP UNIT CHAMBER ASSEMBLY
KA018-05U	BARREL CLIP
KA018-07U	BUCKING
KA018-10U	TENSION SPRING
KA019-01A	MOTOR
KA020-00A	REAR SIGHT ASSEMBLY
KA021-00A	FRONT SIGHT ASSEMBLY
KA025-06U	MAIN SPRING (M100)
KA025-08U	MAIN SPRING (M90)
KA025-11U	TRIGGER
KA029-01U	PISTOL GRIP
KA029-02A	MOTOR PLATE ASSEMBLY
KA029-03U	MOTOR PLATE SCREW (2)